UNIVERSITY OF CAMBRIDGE INTERNATIONAL EXAMINATIONS
International General Certificate of Secondary Education

CANDIDATE NAME	

CENTRE NUMBER						CANDIDATE NUMBER					

8792218070

PHYSICS **0625/23**

Paper 2 Core **October/November 2010**

1 hour 15 minutes

Candidates answer on the Question Paper.

No Additional Materials are required.

READ THESE INSTRUCTIONS FIRST

Write your Centre number, candidate number and name on all the work you hand in.
Write in dark blue or black pen.
You may use a soft pencil for any diagrams, graphs or rough working.
Do not use staples, paper clips, highlighters, glue or correction fluid.
DO **NOT** WRITE IN ANY BARCODES.

Answer **all** questions.
You may lose marks if you do not show your working or if you do not use appropriate units.
Take the weight of 1 kg to be 10 N (i.e. acceleration of free fall = 10 m / s^2).

At the end of the examination, fasten all your work securely together.
The number of marks is given in brackets [ ] at the end of each question or part question.

This document consists of **17** printed pages and **3** blank pages.

DC (SJF/SW) 33915
© UCLES 2010

UNIVERSITY of CAMBRIDGE International Examinations

[Turn over

www.root19.com +91 - 9969 353 391

1 Drops of water from a cracked gutter fall past the window of an IGCSE Physics student's room, as shown in Fig. 1.1.

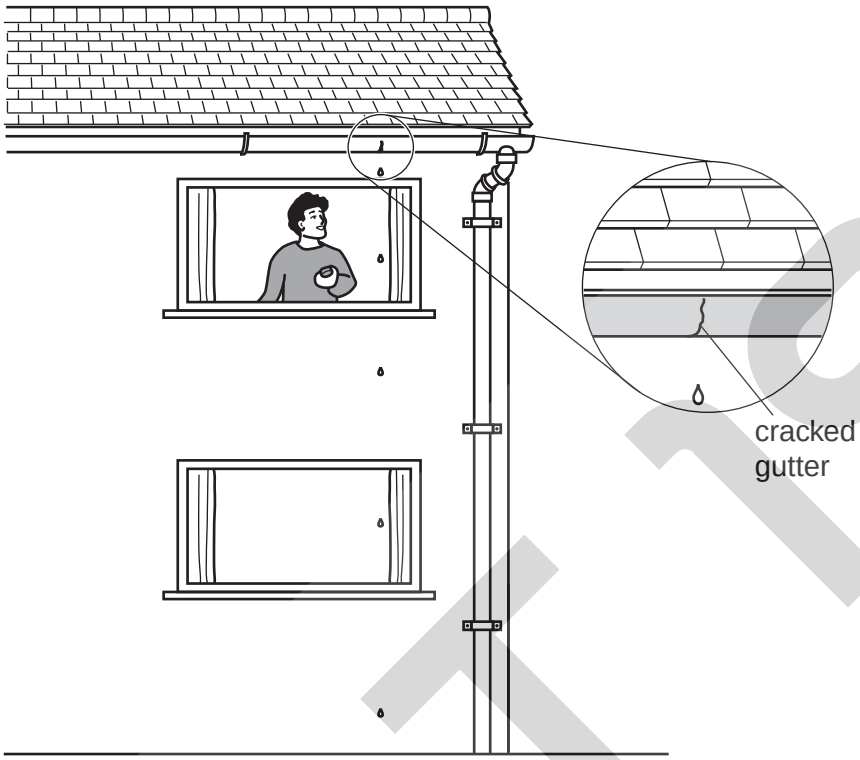

Fig. 1.1

The student uses a digital stopwatch to find the time between one drop and the next.

To do this he

sets the stopwatch to zero,

then, starts the stopwatch as a drop comes into view at the top of the window,

then, stops the stopwatch 40 drops later.

The appearance of the stopwatch after 40 drops is shown in Fig. 1.2.

Fig. 1.2

(a) State the reading on the stopwatch. reading = ... s [1]

www.root19.com +91 - 9969 353 391

(b) Calculate the time interval between one drop and the next.

time = ... s [2]

(c) Explain why it is better to time 40 intervals than to time just 1 interval.

.....

..... [1]

(d) Using Fig. 1.1, estimate the time for a drop to fall from the top of the upper window to the ground.

time = ... s [3]

(e) Fig. 1.1 shows that the drops get further apart as they get closer to the ground.

Explain why this happens.

.....

.....

..... [1]

[Total: 8]

© UCLES 2010
www.root19.com

+91 - 9969 353 301

2 An unstretched spring of overall length 50.0 mm is hung from a support, as shown in Fig. 2.1.

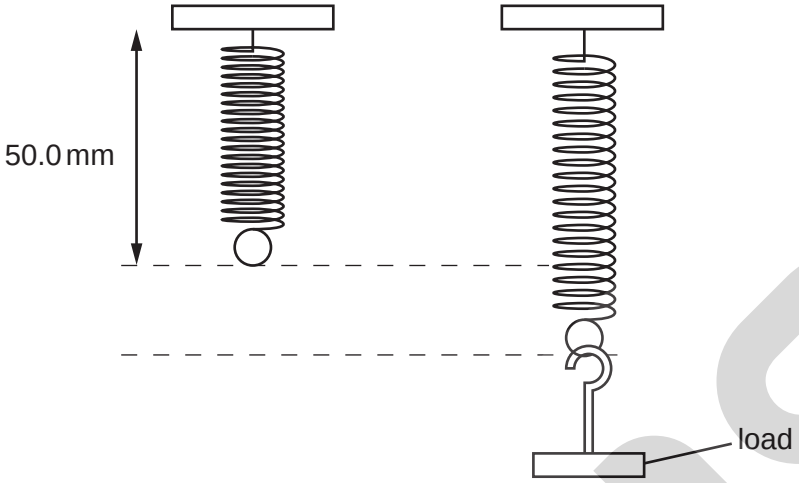

Fig. 2.1

Different loads are placed on the spring and the extension is measured each time.

(a) On Fig. 2.1, mark clearly the extension caused by the load. [1]

(b) The extensions for different loads are given in the table below.

load / N	extension / mm
0	0
1.0	10.0
2.0	20.5
3.0	31.0
4.0	41.5

(i) On Fig. 2.2, plot these values, using dots in small circles (⊙), and draw the best straight line for the points. [3]

www.root19.com +91 - 9969 353 391

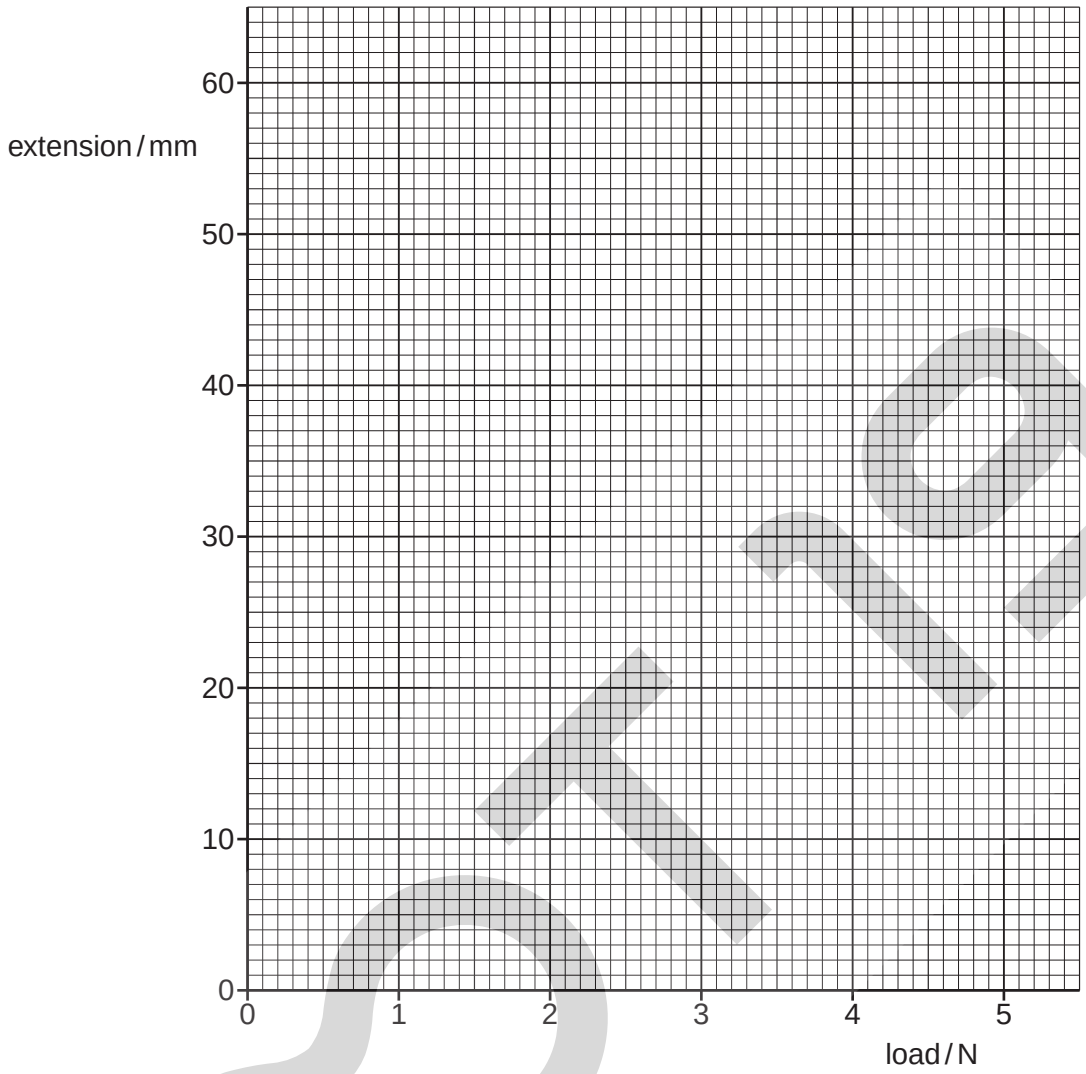

Fig. 2.2

(ii) Complete the following sentence by inserting the appropriate word.

Within the limits of experimental accuracy, the load and the extension of the spring are ..... to each other. [1]

(iii) A load of 2.5 N is hung on the spring.

1. What does the letter N stand for? ..... [1]

2. Use the graph to estimate the overall length of the spring when 2.5 N is hanging from it.

length = ... mm [2]

[Total: 8]

www.root19.com +91 - 9969 353 301

3 **(a)** An aeroplane is flying horizontally at a steady speed in a straight line.

Fig. 3.1 shows three of the four forces acting on it.

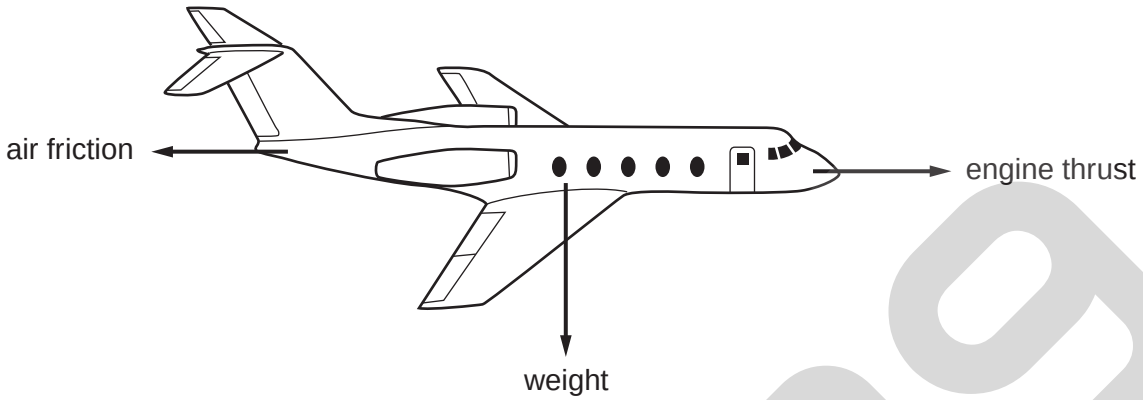

Fig. 3.1

(i) In order to fly horizontally at a steady speed, which two of the forces shown on the aeroplane **must** be equal?

..... and ..... are equal. [1]

(ii) In order to fly horizontally in a straight line, there must be a fourth force acting on the plane.

Draw an arrow on Fig. 3.1 to represent this force. [1]

(b) The aeroplane in Fig. 3.1 flies an outward journey from Budapest (Hungary) to Palermo (Italy) in 2.75 hours. The distance is 2200 km.

(i) Calculate, in km/h, the average speed of the aeroplane.

average speed = ... km/h [3]

(ii) On the return journey from Palermo to Budapest, the journey time is shorter, even though the engine thrust is the same.

Suggest what might have caused the return journey to be shorter.

.....

..... [1]

[Total: 6]

© UCLES 2010
www.root19.com

+91 - 9969 353 391

4 A simple pendulum starts with its bob at position X, shown in Fig. 4.1. The bob is pulled aside to Y and then released. It swings from Y to Z and back to Y.

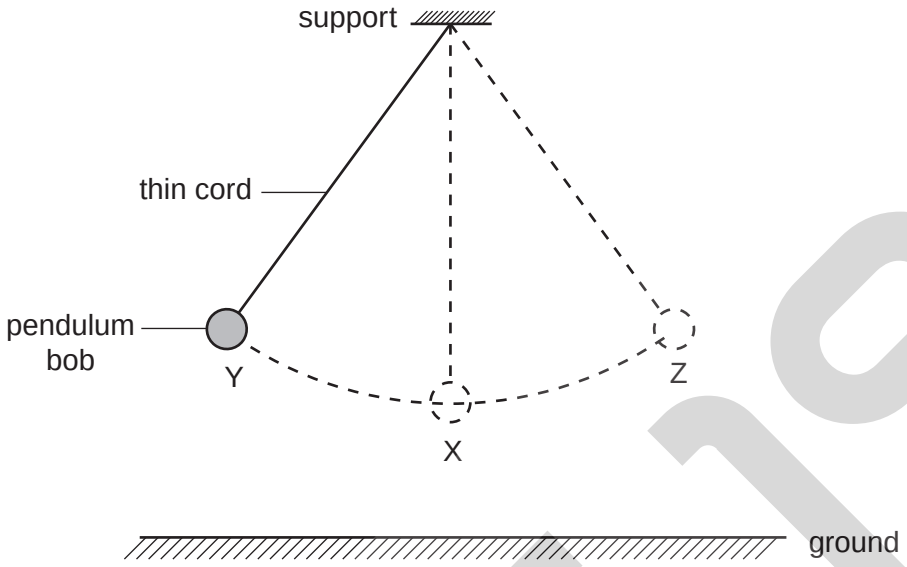

Fig. 4.1

Write suitable words in the gaps in the following sentences. Ignore air resistance.

In order to move the bob from X to Y, ... has to be done on it and its ..... energy increases because it is raised further from the ground. As it moves towards X, some of this energy is converted into ..... energy. Throughout the swing from Y to Z and back to Y, the total energy is ..... . Energy is measured in units called ..... .
[5]

[Total: 5]

www.root19.com +91 - 9969 353 301

5 **(a)** The list below contains terms that are used when dealing with heat and temperature.

boiling point, melting point, internal energy, thermal capacity

(i) Which one of these quantities will increase when an object is heated?

..... [1]

(ii) Which one of these determines the temperature rise when an object is given a quantity of energy, without changing state?

..... [1]

(iii) Some liquid is heated until its temperature stops rising.

Which one of these quantities describes the temperature at which this happens?

..... [1]

(b) Fig. 5.1 shows an apparatus containing a brass rod. The brass rod is inside a tube, called a steam jacket, through which steam may be passed. The rod is fixed at the right-hand end, but free to move at the left-hand end. The dial micrometer indicates any movement of the left hand end.

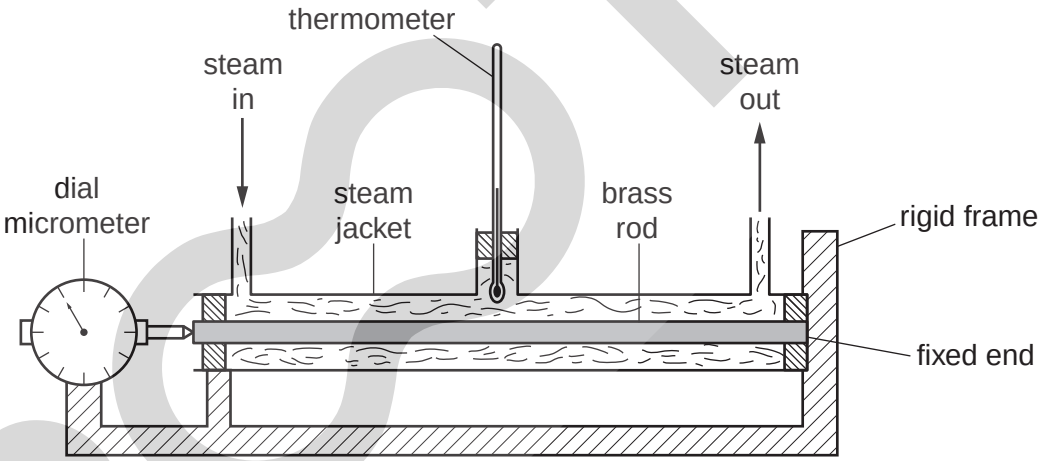

Fig. 5.1

Steam is now passed through the steam jacket. In the boxes below, write down what will happen to the readings on the thermometer and the dial micrometer, and why.

	what will happen	why
reading on thermometer		
reading on dial micrometer		

[4]

[Total: 7]

www.root19.com +91 - 9969 353 391

6 **(a)** Fig. 6.1 shows a ray of light AB striking a plane mirror at an angle of incidence of 40°.

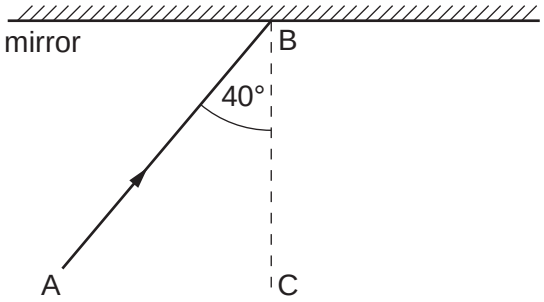

Fig. 6.1

State the value of the angle of reflection of the ray ..... [1]

(b) In Fig. 6.2, the mirror has been rotated 10° from its position in Fig. 6.1. AB has remained unchanged.

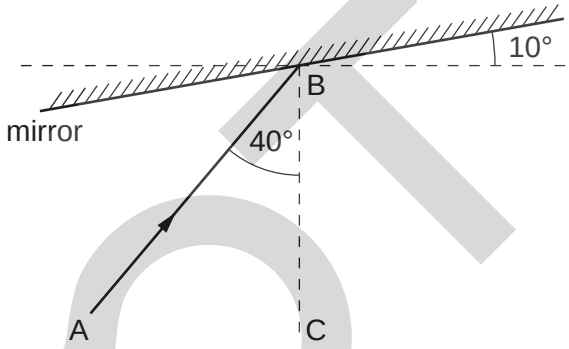

Fig. 6.2

(i) On Fig. 6.2, use a straight edge to draw the reflected ray.

(ii) State the value of the angle between the reflected ray and the line BC. .....

(iii) Through how many degrees does the reflected ray rotate when the mirror rotates through 10°? ..... [4]

(c) An object of height 2 cm is placed 5 cm in front of a plane mirror.

(i) State the height of the image formed by the mirror. ..... [1]

(ii) Find the distance between the object and the image.

distance = ... cm [2]

[Total: 8]

www.root19.com +91 - 9969 353 301

7 A narrow beam of white light enters a glass prism and is split into the colours of the visible spectrum, as shown (not to scale) in Fig. 7.1.

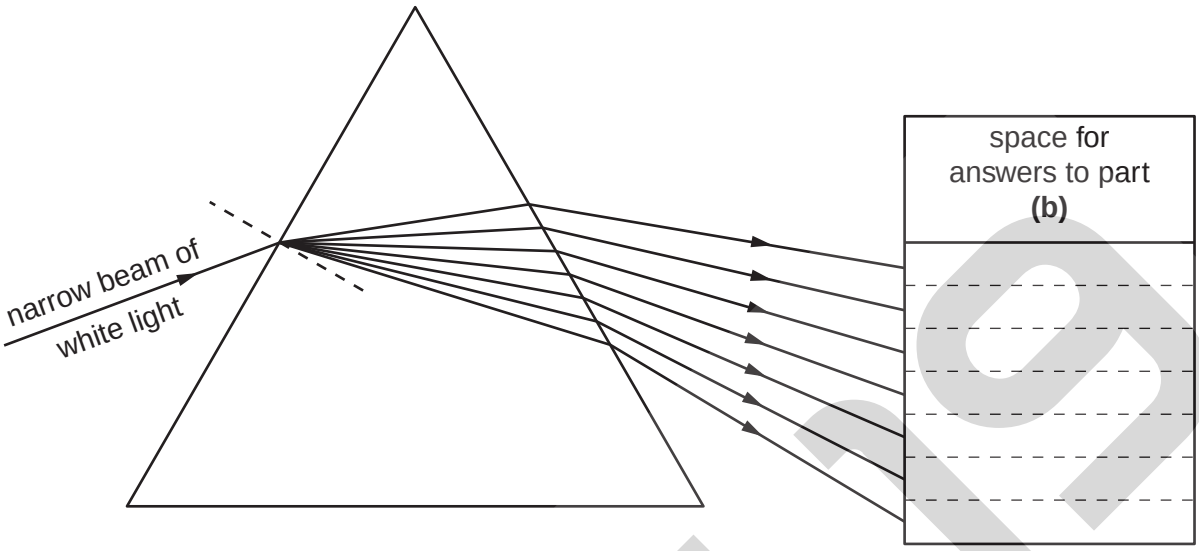

Fig. 7.1

(a) What name do we give to

(i) the bending of the light as it enters the prism,

.....

(ii) the different amounts of bending that give rise to the spectrum?

.....
[2]

(b) The lines leaving the prism represent rays of the seven main colours of the visible spectrum.

In the answer spaces provided on Fig. 7.1, write

(i) 'red' in the space alongside the red ray,

(ii) 'yellow' in the space alongside the yellow ray. [2]

(c) The visible spectrum is part of the electromagnetic spectrum.

State two other types of radiation that are also part of the electromagnetic spectrum.

1. .....

2. ..... [2]

[Total: 6]

www.root19.com +91 - 9969 353 391

8 A stretched string is vibrating between two fixed ends. Fig. 8.1 shows how the string is vibrating.

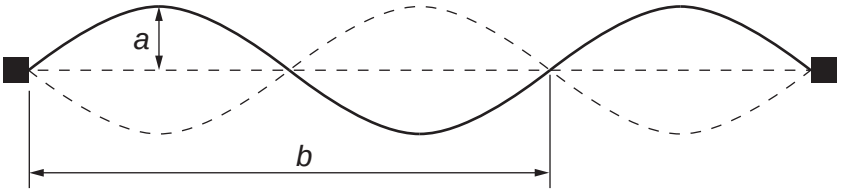

Fig. 8.1

(a) State the name of

(i) distance *a*, ... [1]

(ii) distance *b*. ..... [1]

(b) The string is causing a sound to be transmitted through the air.

(i) Describe how the string causes the sound.

.....

.....

.....

.....

..... [2]

(ii) State what happens to the sound as the distance *a* decreases.

.....

..... [1]

[Total: 5]

© UCLES 2010
www.root19.com

+91 - 9969 353 301

9 **(a)** **(i)** In the space below, draw a diagram of the circuit that you would use to determine the resistance of a coil of wire using a voltmeter and an ammeter.

Use conventional symbols and label the coil clearly.

[3]

(ii) State the equation you would use to calculate the resistance of the coil.

[1]

(iii) State two properties of the wire on which the resistance of the coil depends.

1. .....

2. ..... [2]

(b) In Fig. 9.1, AB is a 2.0 m length of uniform resistance wire, connected into a circuit.

Ignore the resistance of the battery.

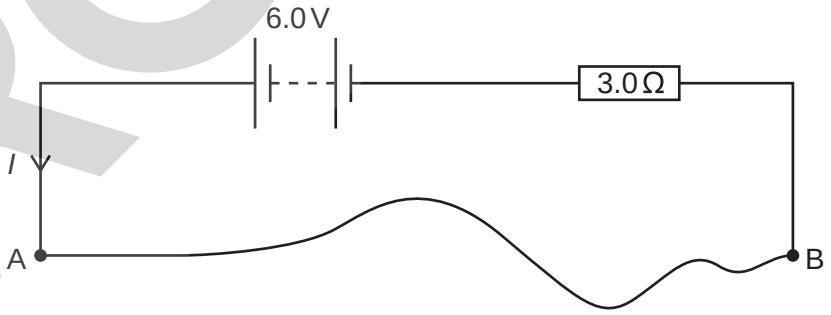

Fig. 9.1

www.root19.com +91 - 9969 353 391

The current *I* is 1.5 A.

Calculate the resistance per metre of the resistance wire.

resistance per metre = ... Ω/m [4]

[Total: 10]

© UCLES 2010
www.root19.com

+91 - 9969 353 301

10 **(a)** The apparatus in Fig. 10.1 is set up in a laboratory. The metal wheels are rolled along the rails from the left-hand end to the right-hand end.

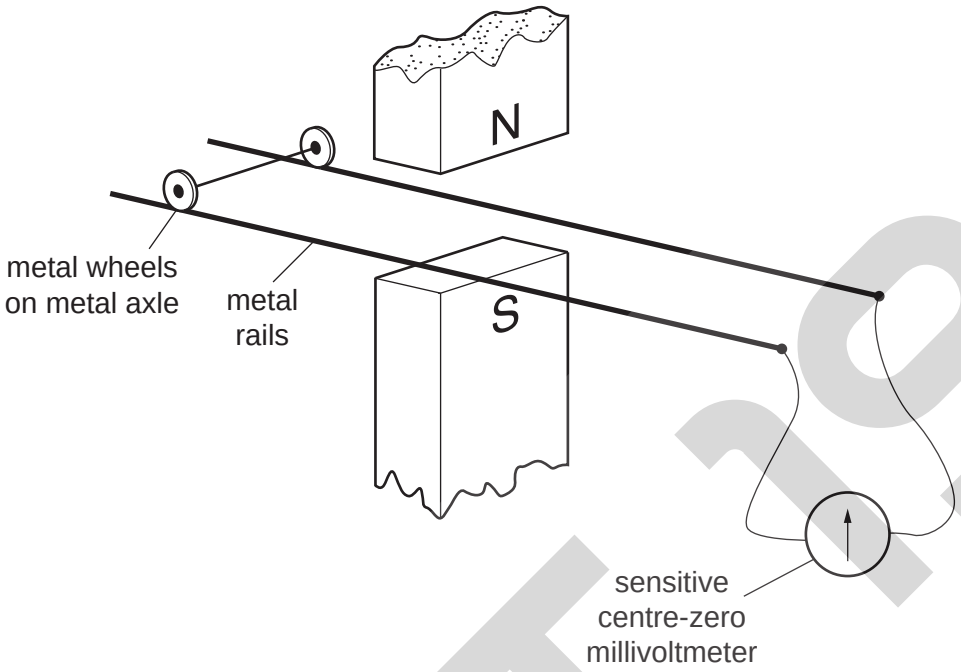

Fig. 10.1

(i) Describe what is seen happening to the pointer on the sensitive centre-zero millivoltmeter.

.....

..... [2]

(ii) Explain why this happens.

.....

.....

.....

.....

..... [3]

(iii) The metal wheels are now rolled back to the left-hand end again.

Describe what now happens to the millivoltmeter pointer.

.....

..... [1]

www.root19.com +91 - 9969 353 391

(b) Fig. 10.2 shows a magnet suspended above a coil of wire.

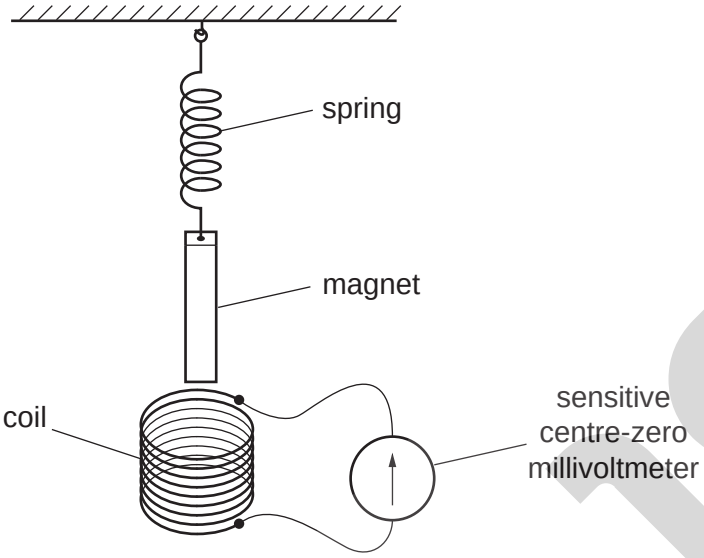

Fig. 10.2

The end of the magnet is pushed into the coil and released, so that it bounces repeatedly in and out of the coil.

Describe what is seen on the sensitive centre-zero millivoltmeter.

.....

..... [1]

[Total: 7]

© UCLES 2010
www.root19.com

+91 - 9969 353 301

11 **(a)** In the space below, draw the circuit symbol for a fuse.

[1]

(b) Describe how a fuse protects an electric circuit.

.....

.....

.....

..... [2]

(c) A mains electricity circuit has three wires, live, neutral and earth.

In which of these is the fuse connected? Tick one box.

live ☐

neutral ☐

earth ☐

[1]

[Total: 4]

© UCLES 2010
www.root19.com

+91 - 9969 353 391

12 **(a)** A β-particle may be represented by the symbol $^{0}_{-1}\mathbf{e}$.

(i) What does the **e** indicate about a β-particle?

.....

(ii) What does the **0** indicate about a β-particle?

.....

(iii) What does the **–1** indicate about a β-particle?

..... [4]

(b) The nuclide $^{250}_{97}$Bk decays by emitting a β-particle.

Complete the nuclear equation for this decay by writing appropriate numbers in the boxes.

$$^{250}_{97}\text{Bk} \longrightarrow \boxed{}\,\text{Cf} + {}^{0}_{-1}\text{e}$$

[2]

[Total: 6]

www.root19.com +91 - 9969 353 391

BLANK PAGE

© UCLES 2010
www.root19.com

+91 - 9969 353 391

BLANK PAGE

© UCLES 2010
www.root19.com

+91 - 9969 353 391

BLANK PAGE

Permission to reproduce items where third-party owned material protected by copyright is included has been sought and cleared where possible. Every reasonable effort has been made by the publisher (UCLES) to trace copyright holders, but if any items requiring clearance have unwittingly been included, the publisher will be pleased to make amends at the earliest possible opportunity.

University of Cambridge International Examinations is part of the Cambridge Assessment Group. Cambridge Assessment is the brand name of University of Cambridge Local Examinations Syndicate (UCLES), which is itself a department of the University of Cambridge.

www.root19.com +91 - 9969 353 391